Phone +66 87 803 1661 | www.imRNasia.com | sale@imRNasia.com

REVISIONS				
ZONE	REV.	DESCRIPTIONS	DATE	APP.

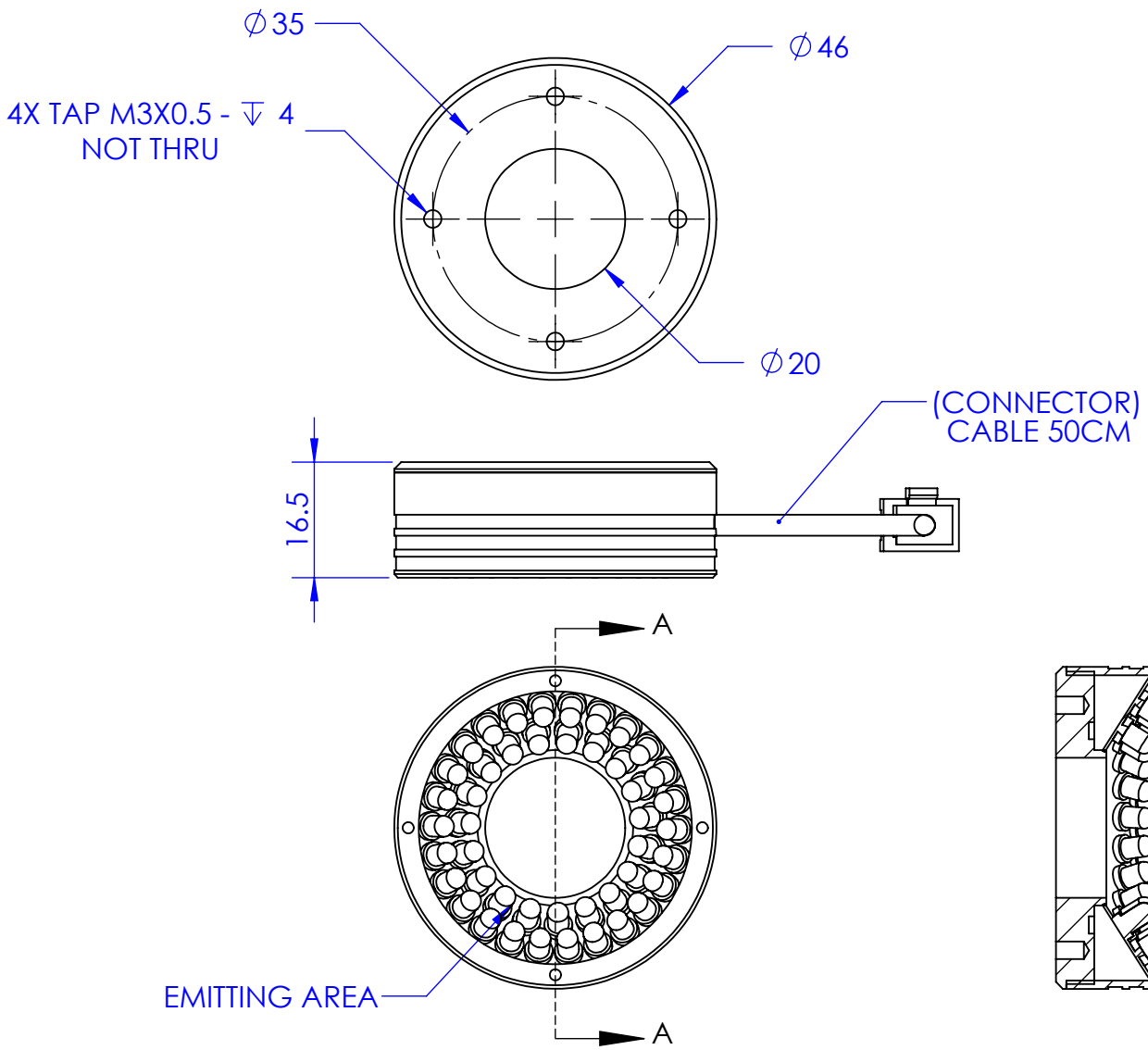

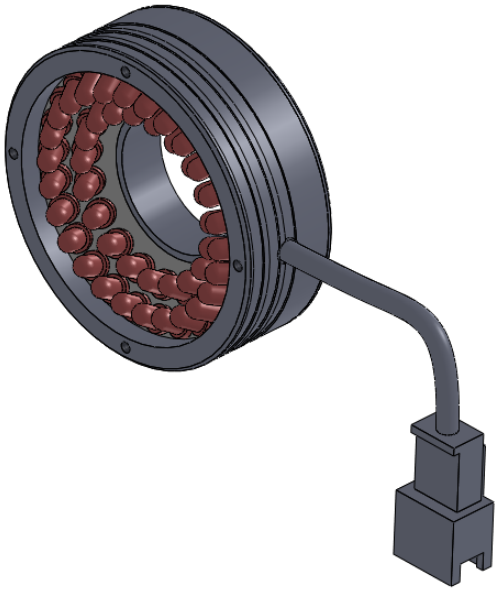

SECTION A-A

DESIGN BY	KB TAN	UNIT: MM	PRODUCT SERIES: RL SERIES				
CHECK BY	KB TAN						
DATE	02/07/2015	REVISION: 02	TITLE	DRAWING LAYOUT	COLOUR:	-	-
MATERIAL	-				VOLTAGE:	-	-
FINISHING	-	SCALE: 1 : 1	PART NO	RL30-040-X	CURRENT:	-	-
QTY	-		DWG NO	-	POWER:	-	-
					SHEET 1 OF 1		