www.imRNasia.com | m.+66(0)87-803-1661 | sale@imRNasia.com

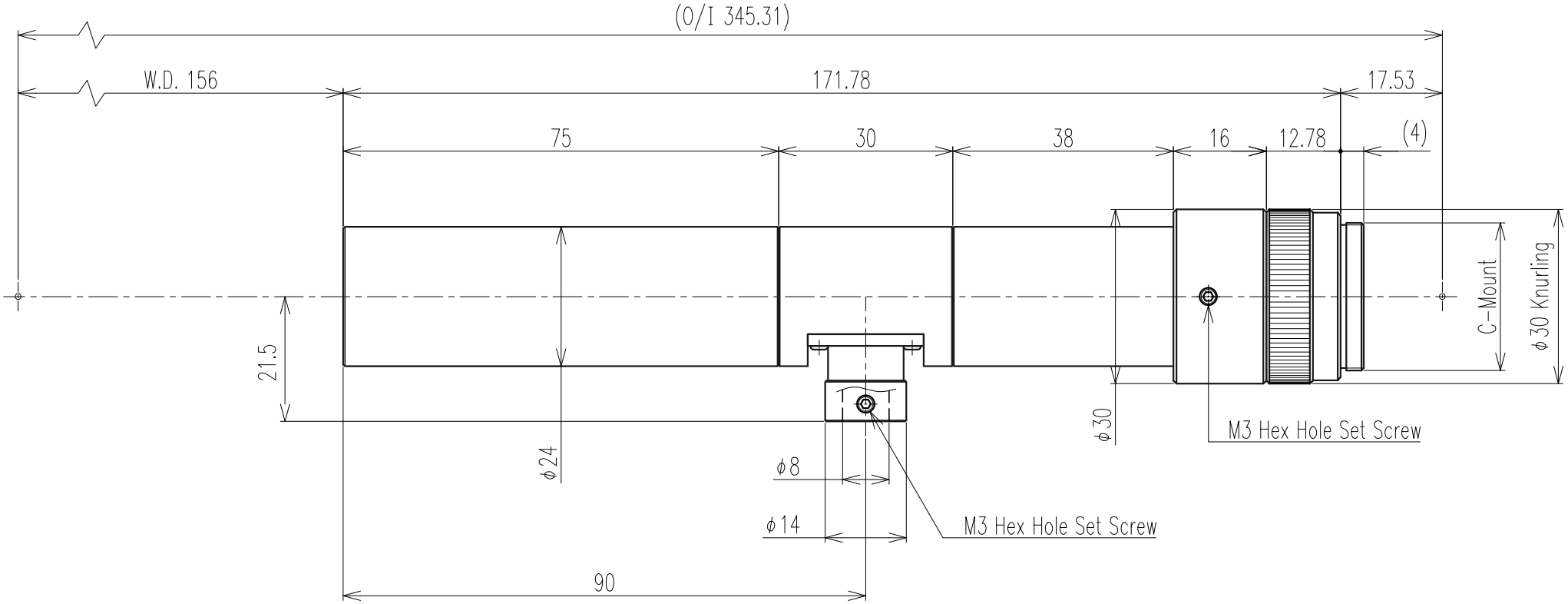

Optical Spec					
Mag.	x 3±0.09 (±3%)	Resolution	8.4	μm	
W.D.	156±4.68 mm	Optical Distortion	1.13	%	
Eff. F.No.	37.5				
N.A.	0.040	TV Distortion	0.37	%	
D.O.F.	0.34 mm				

Notice	
Compatible Camera : ≦ ½"	CoC 40μm
Calculation conditions	D.O.F.= 0.33 mm
Compatible pixel : 10 μm	
Correspond λ : 550 nm	
Correct Iris Stop : φ mm	

THIRD ANGLE PROJECTION
UNIT : mm

SCALE	DATE	MODEL NAME
1 : 1	2015.06.23	TV-3F-150

OPTART CORP.

REV. 20150326