www.imRNasia.com | m.+66(0)87-803-1661 | sale@imRNasia.com

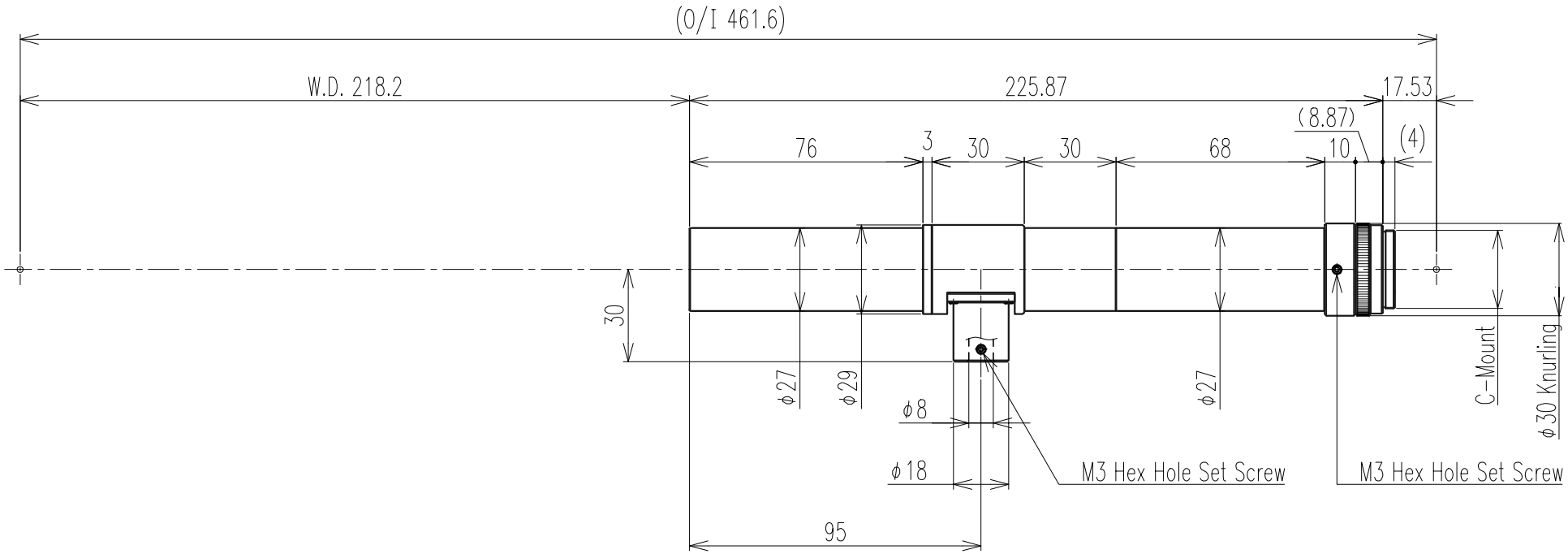

Optical Spec				
Mag.	x 2±0.06 (±3%)	Resolution	11.2	μm
W.D.	218.2±6.546 mm	Optical Distortion	0.92	%
Eff. F.No.	33.3			
N.A.	0.030	TV Distortion	0.29	%
D.O.F.	0.64 mm			

Notice	
Compatible Camera : ≦ ½"	CoC 40μm
Calculation conditions	D.O.F.= 0.67 mm
Compatible pixel : 10 μm	
Correspond λ : 550 nm	
Correct Iris Stop : φ mm	

THIRD ANGLE PROJECTION
UNIT : mm

SCALE	DATE	MODEL NAME
1 : 2	2015.11.19	TV-2F-220

OPTART CORP.

REV. 20150326