Phone +66 87 803 1661 | www.imRNasia.com | sale@imRNasia.com

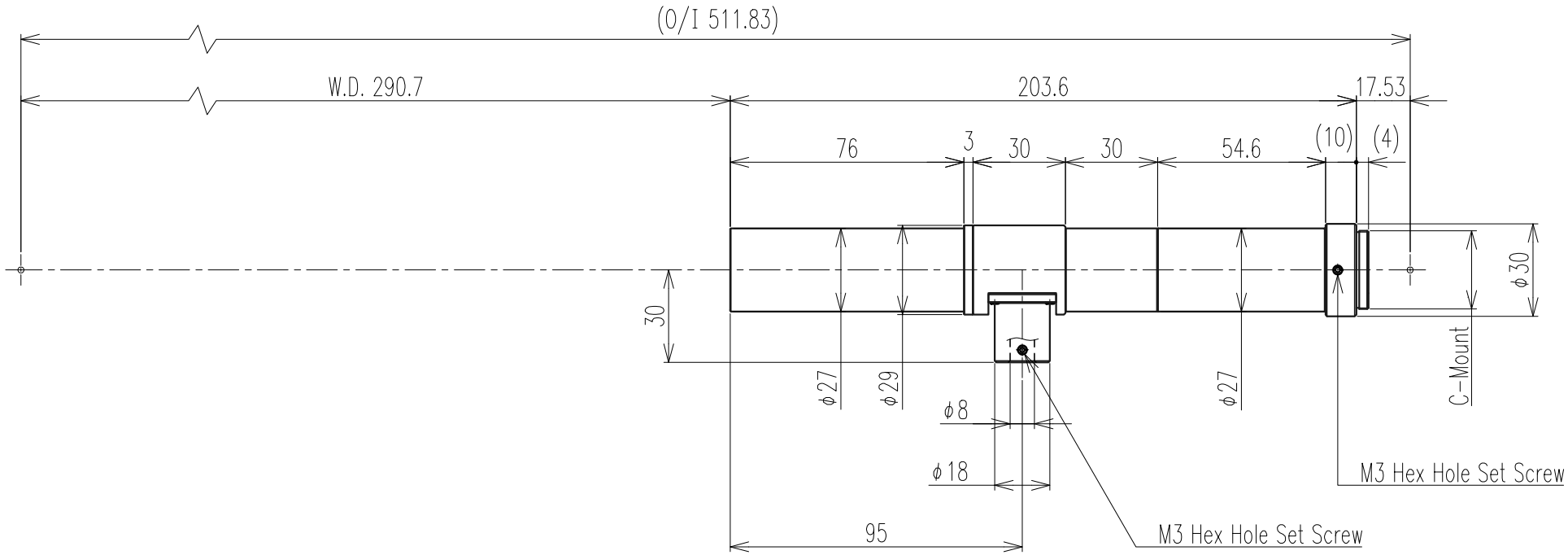

Optical Spec				
Mag.	x 1±0.03 (±3%)	Resolution	13.4	μm
W.D.	290.7±8.721 mm	Optical Distortion	0.13	%
Eff. F No.	20.0			
N.A.	0.025	TV Distortion	0.04	%
D.O.F.	1.24 mm			

Notice	
Compatible Camera : ≦ ½"	CoC 40μm
Calculation condition	D.O.F.= 1.60 mm
Compatible pixel : 10 μm	
Correspond : 550 nm	
Correct Iris Stop : φ mm	

THIRD ANGLE PROJECTION
UNIT : mm

SCALE	DATE	MODEL NAME
1 : 2	2015.11.19	TV-1F-290

OPTART CORP.

REV. 20150326