HF1214J−2

Phone +66 87 803 1661 | www.imRNasia.com | sale@imRNasia.com

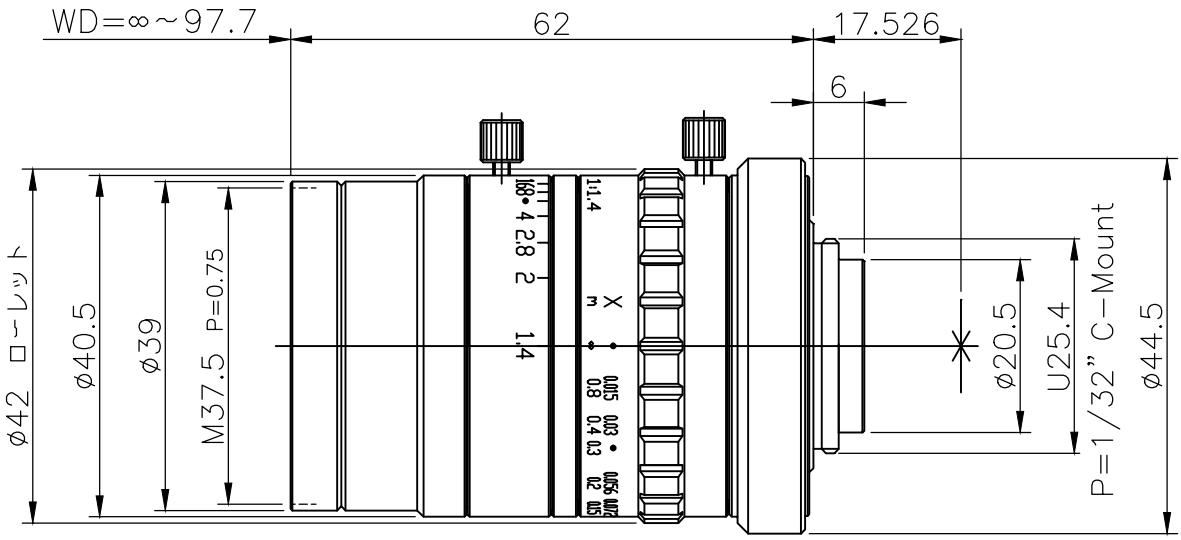

Model		HF1214J−2
Application		Machine Vision Lens for 5 Mega
Focal Length		12mm
Maximum Magnification		0.103X
WD		97.7mm~INF
Maximum Aperture		1.4(∞)
Angle of View	1/3	22.29°X16.80°
	1/2	29.47°X22.29°
	2/3	39.75°X30.35°
TV Distortion	1/3	−0.20%
	1/2	−0.29%
	2/3	−0.31%
Weight		172g
Max. Compatible CCD		2/3inch(ø11mm)
Mount		C−Mount
Filter Pitch		M37.5 P=0.5

※Indicated specifications are design values.