computar

M1214-MP2

f=12mm F1.4
for 2/3 type Megapixel Cameras
C-Mount

Model No.		M1214-MP2		Effective Lens Aperture	Front	φ21.0mm	
Focal Length		12mm			Rear	φ13.0mm	
Max. Aperture Ratio		1:1.4		Distortion	2/3type	-0.1%(y=5.5)	
Max. Image Format		8.8mm x 6.6mm(φ11mm)			1/2type	-0.35%(y=4.0)	
Operation Range	Iris	F1.4 - F16C		Back Focal Length		13.1mm	
	Focus	0.15m - Inf.		Flange Back Length		17.526mm	
Control	Iris	Manual		Mount		C-Mount	
	Focus	Manual		Filter Size		M30.5 P=0.5mm	
Object Dimension at M.O.D	2/3 type	12.1cm x 9.0cm		Dimensions		φ33.5mm x 28.2mm	
	1/2 type	8.8cm x 6.5cm		Weight		61.9g	
Angle of View	D	2/3 type	49.2°	1/2 type	37.0°		
	H		40.4°		30.0°		
	V		30.8°		22.7°		
Operating Temperature		-10℃ - +50℃					

M.O.D : Minimum Object Distance
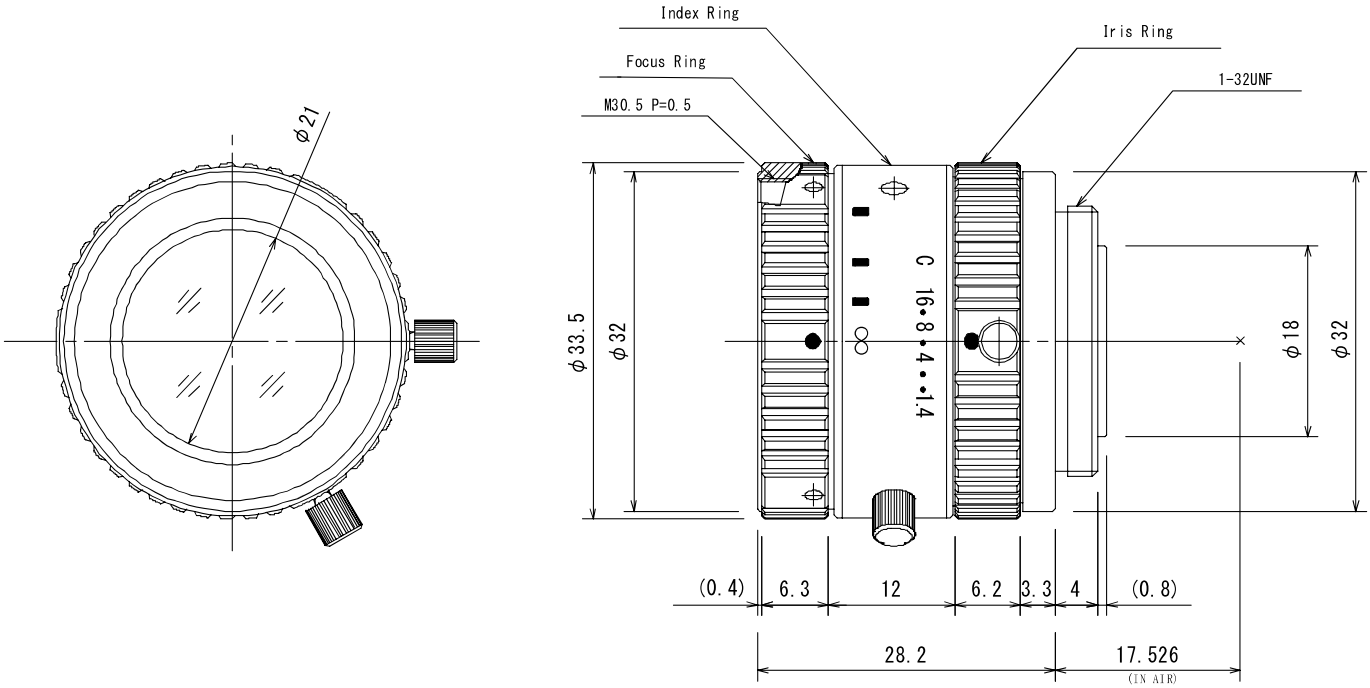
Dimensions